

Section Steel Details (3D Drawing)

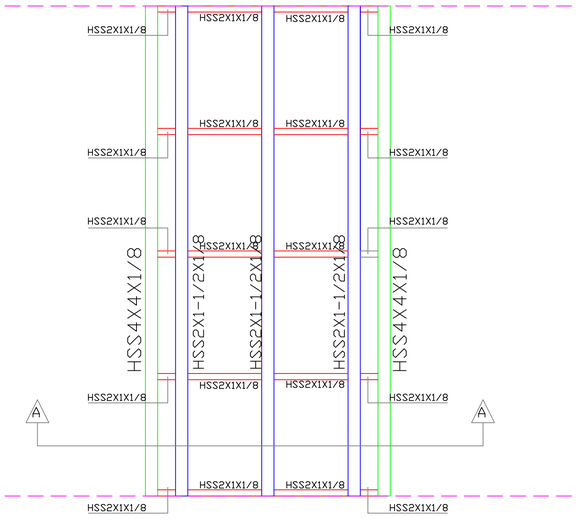

Top View

Section name/HSS	length/m	Number of member
HSS4X4X1/8	---	2
HSS2X1-1/2X1/8	---	3
HSS2X1X1/8	1.35	56
HSS2X1X1/8	1.21	56

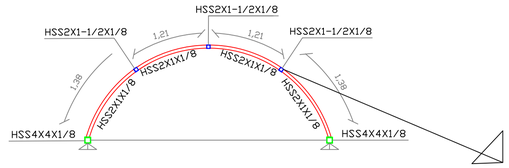

Section A-A

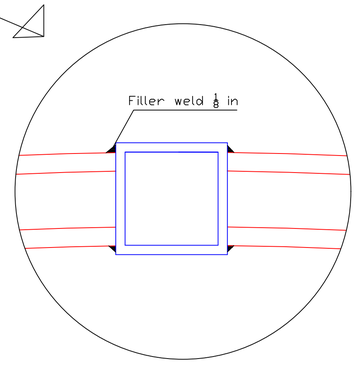

PALESTINE POLYTECHNIC UNIVERSITY

COLLEGE OF ENGINEERING

CIVIL & ARCH. ENG. DEPARTMENT

BUILDING ENGINEERING

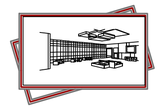

Designed by:

Ihab Talahmeh

Hammada Hosheya

Mahmoud Mahariq

Supervisor:

Dr. Riyad Abdel-Karim Awad

Project:

Dura Woman's Centre

Drawing :

Steel Design Details

No.:

S 29

Scale:

1:50

Date:

29-4-2018